CONVERTED INTO PDF BY MANISH

Sectional Views

• Sectional Views

– Why sectional views are needed

- ❖ Invisible features of an object are shown by means of hidden lines in their projected views.
- ❖ But when such lines are too many, these lines make the views more complicated and difficult to interprete.

In such a case it is customary to imagine the object as being cut through by plane

The part of the object between a plane & observer is assumed to be removed

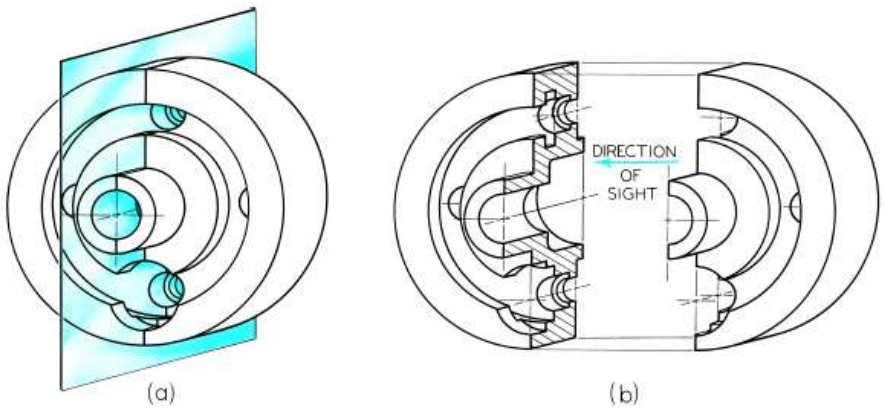

Figure 7-1
A Section.

Important terms

Cutting plane or section plane

The imaginary plane by which the object is assumed to be cut through. It is assumed to be parallel to the plane on which the view is projected

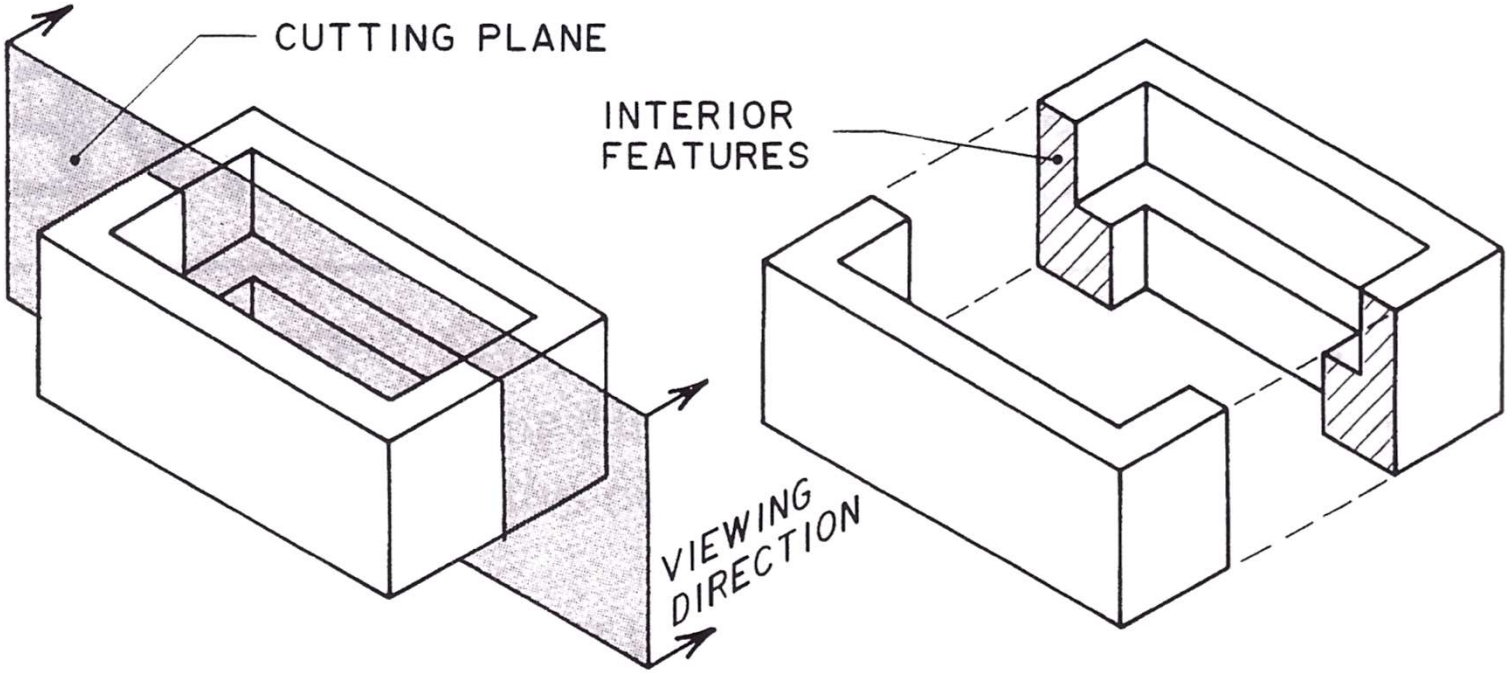

CUTTING PLANE

Cutting plane is a plane that ***imaginarily cuts*** the object to reveal the internal features.

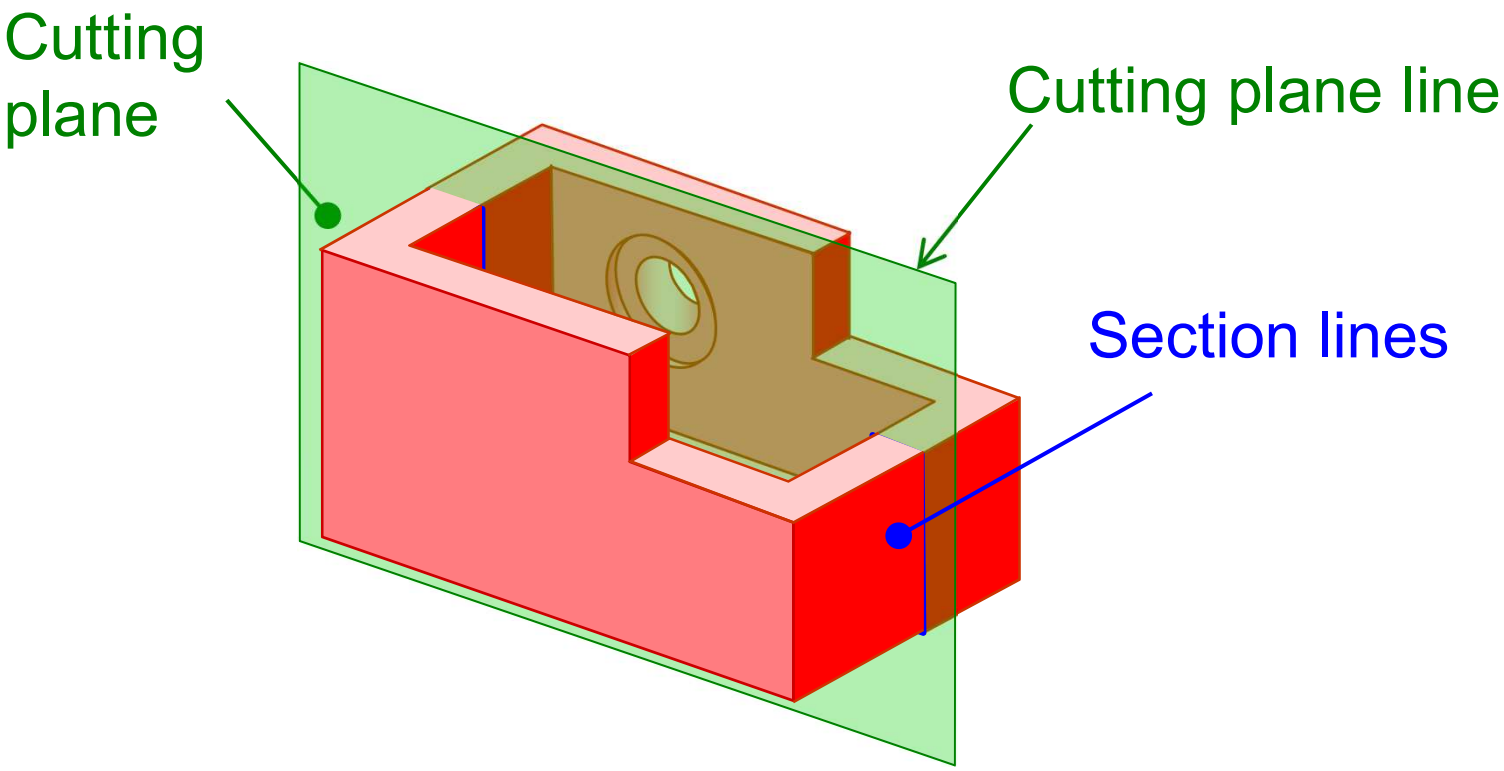

Section : The surface produced by cutting an object by the section plane is called section

Sectional view : The projection of the section along with the remaining part of the object is called sectional view

Cutting plane line : The position of the cutting plane is indicated by these line. The direction of viewing the section is shown by arrows resting on the cutting plane line & designated by capital letter. e.g. A-A

CUTTING PLANE LINE

Cutting plane line is an ***edge view*** of the cutting plane.

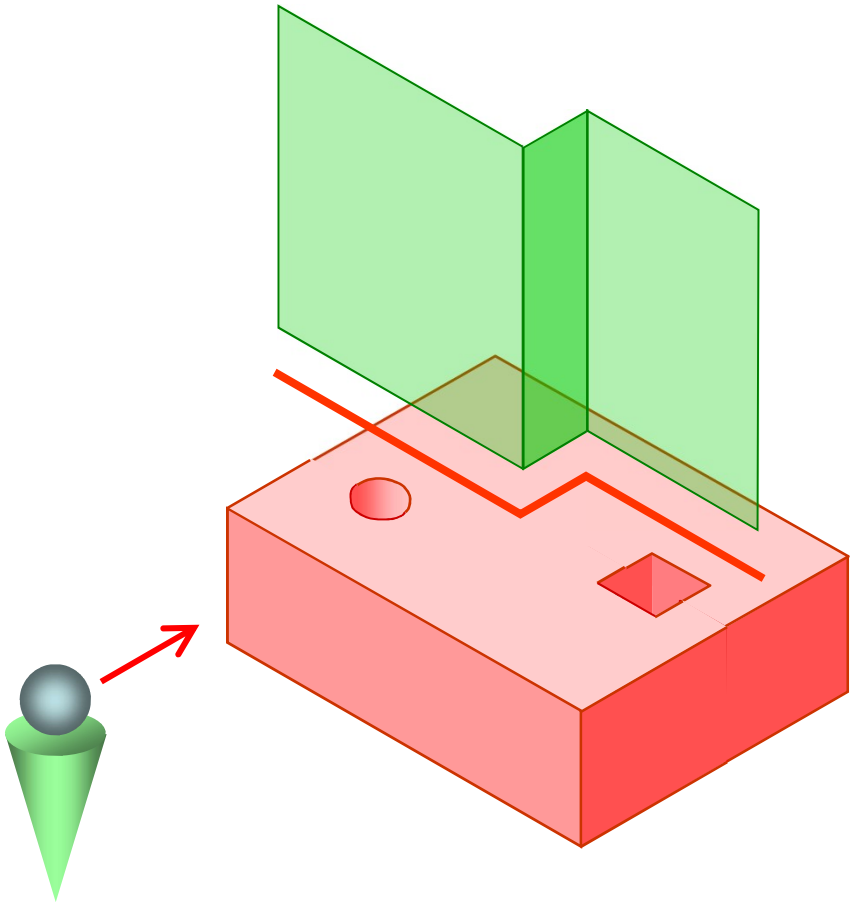

Indicate the ***path*** of cutting plane.

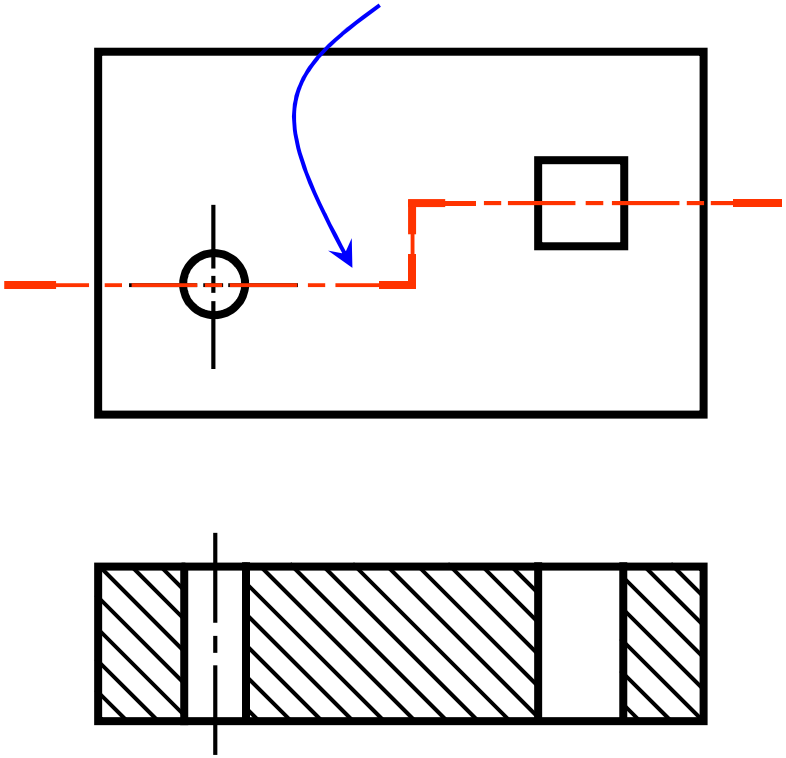

CUTTING PLANE LINE

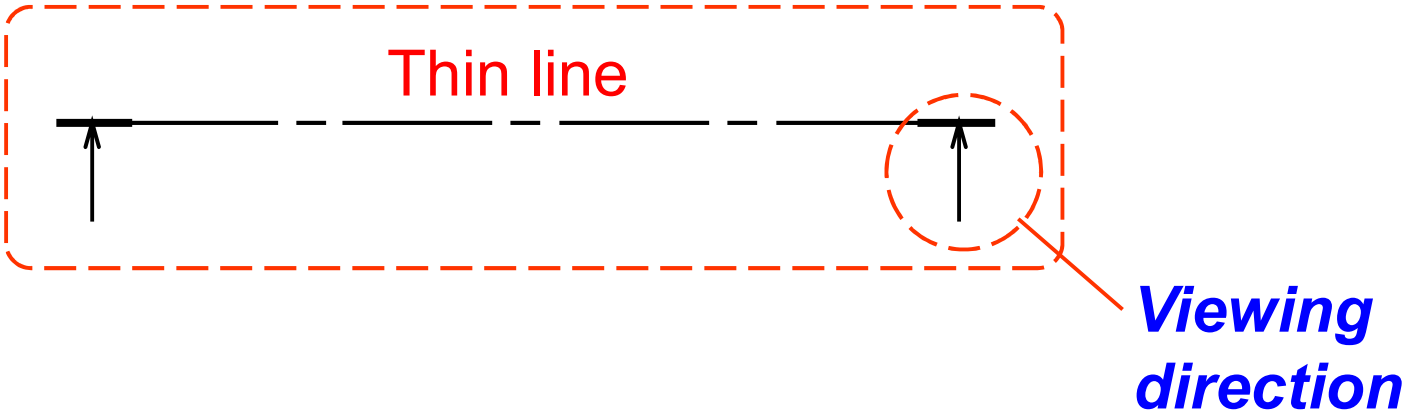

- **The sight arrows at the end of the cutting plane are always perpendicular to the cutting plane.**

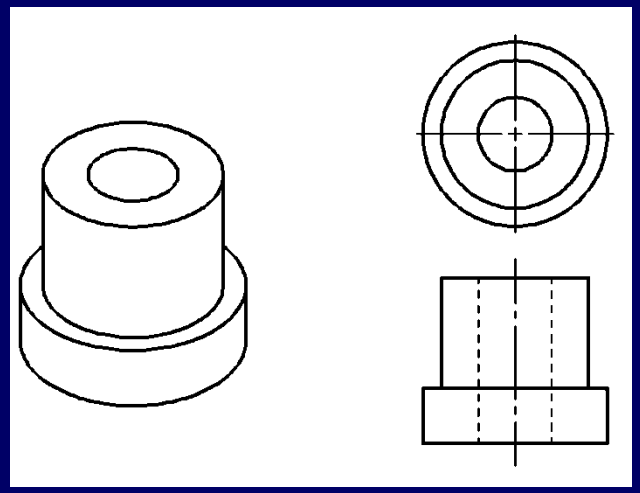

- **The direction of the arrow indicates the line of sight.**

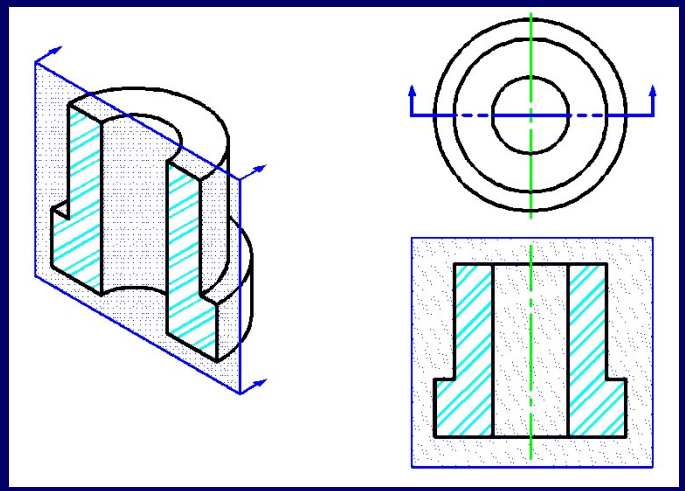

The section is indicated by hatching or section lines

The section lines should be drawn evenly spaced inclined at 45^0 to the axis or to the main outline of the section. It can be drawn at 30^0 or 60^0

Section lines should be drawn with 2H or 3H pencil

SECTION LINING

Section lines or ***cross-hatch lines*** are used to *indicate the surfaces that are cut* by the cutting plane.

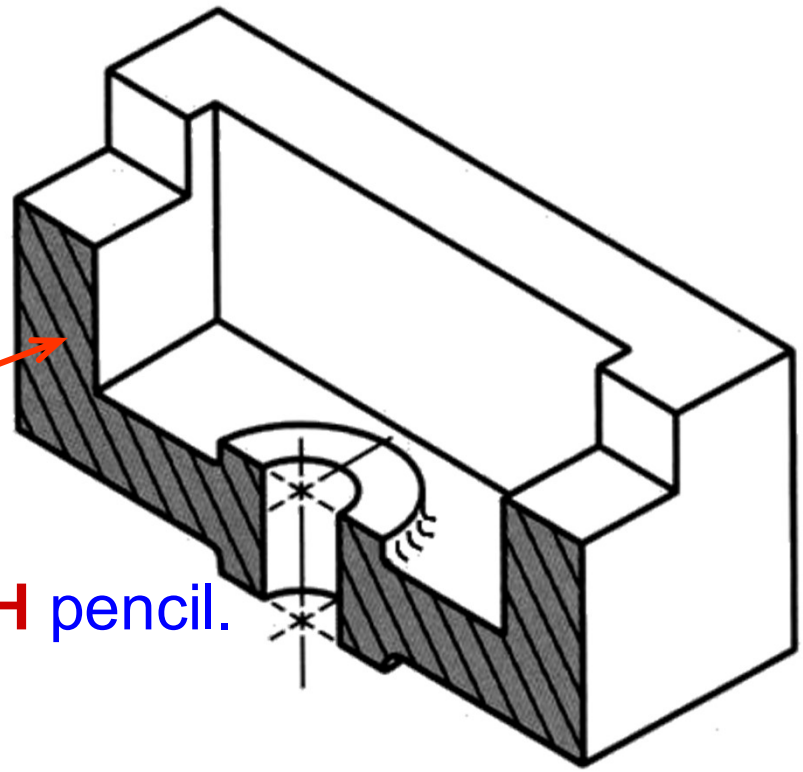

Section lines

Drawn with 2**H or 3H** pencil.

Section Lines

- Section lines (crosshatching) are used to show where the cutting plane passed through solid material

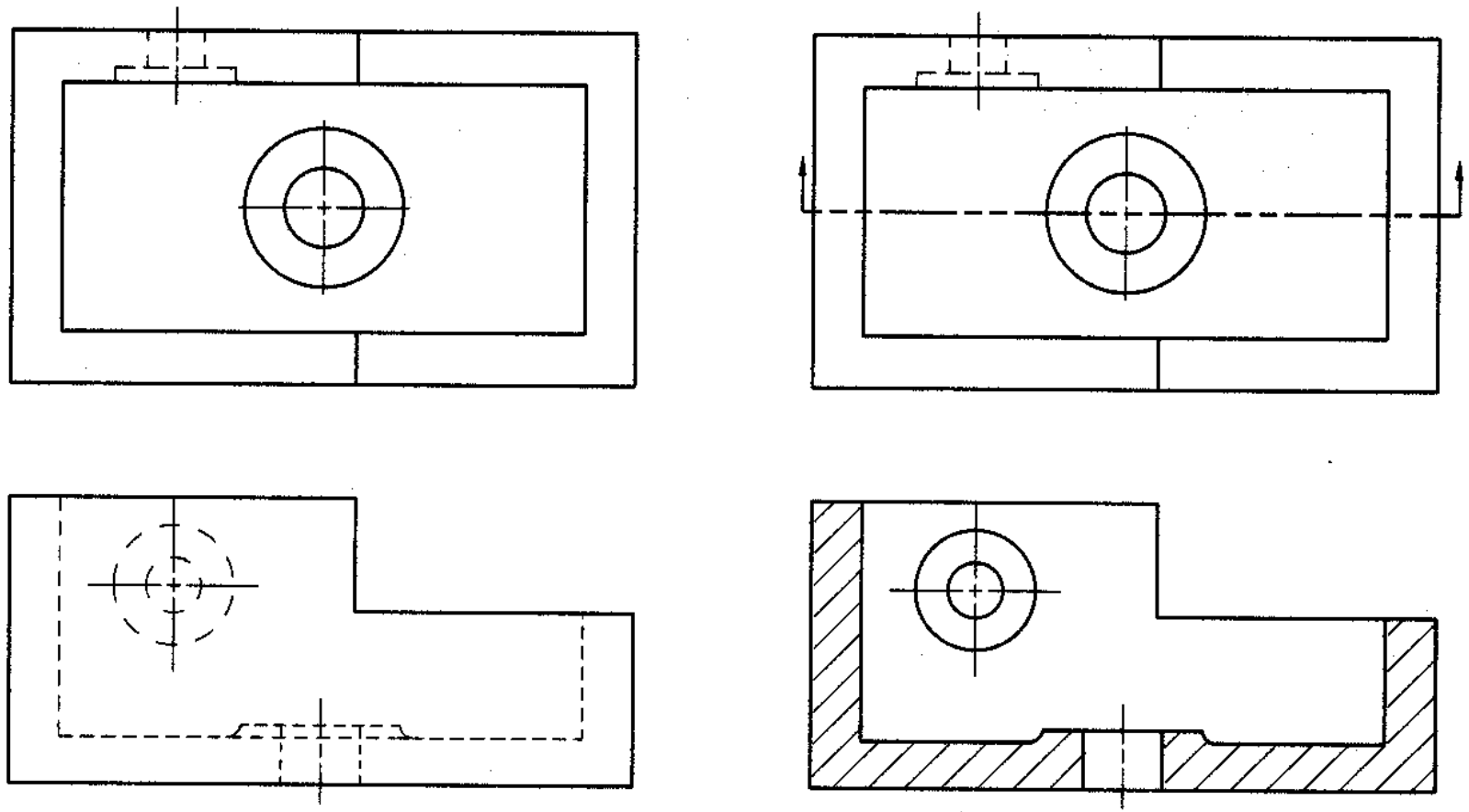

Normal multiview drawing

Section view drawing

SECTION LINES SYMBOLS

- The section lines are different for each of material's type.
- For practical purpose, the cast iron symbol is used most often for any materials.

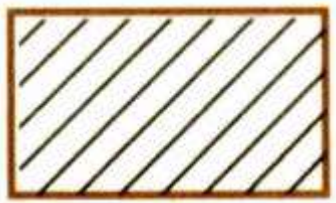

Cast iron,
Malleable iron

Concrete

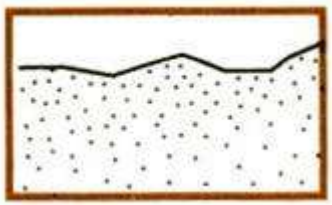

Sand

Wood

SECTION LINING PRACTICE

- The spaces between lines may vary from 1.5 mm for small sections to 3 mm for large sections.

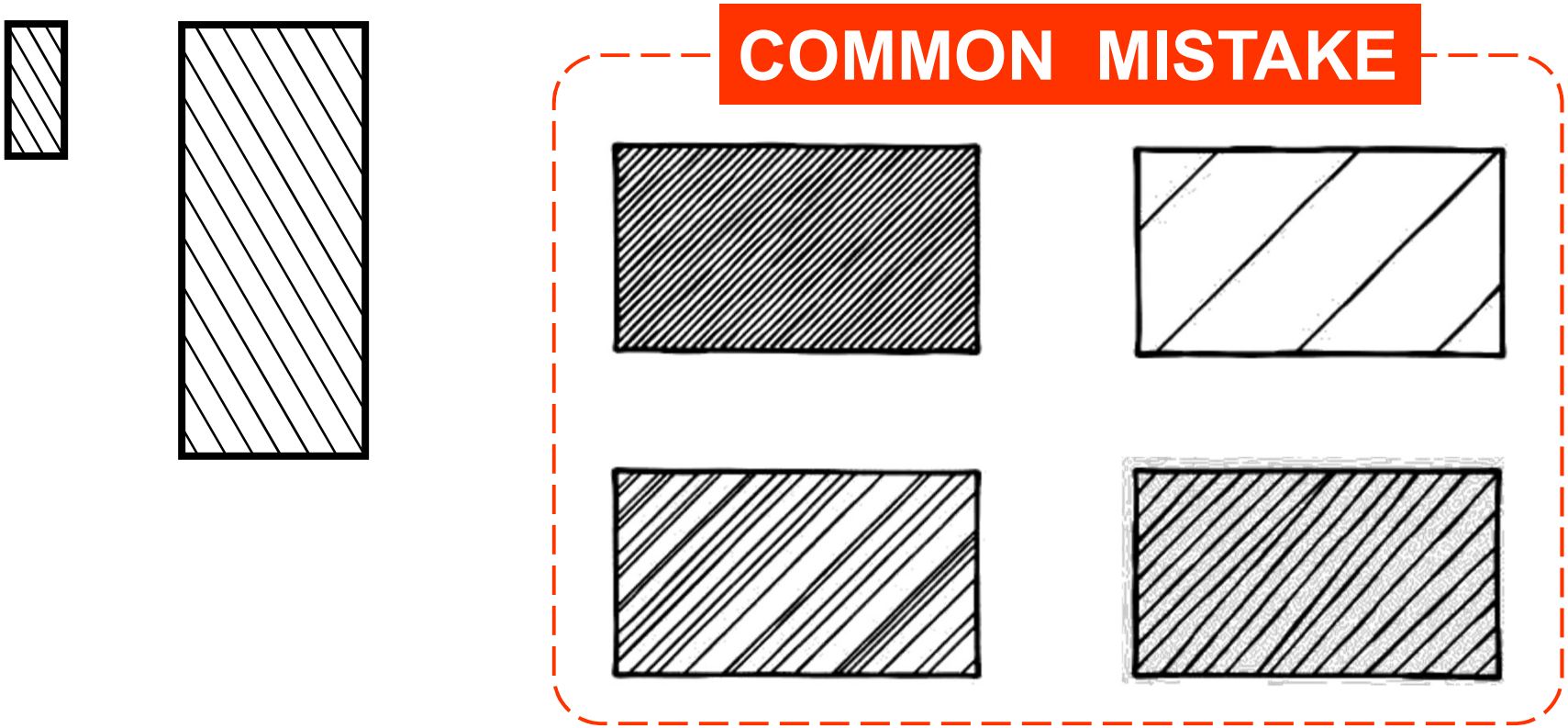

Section Lining Technique

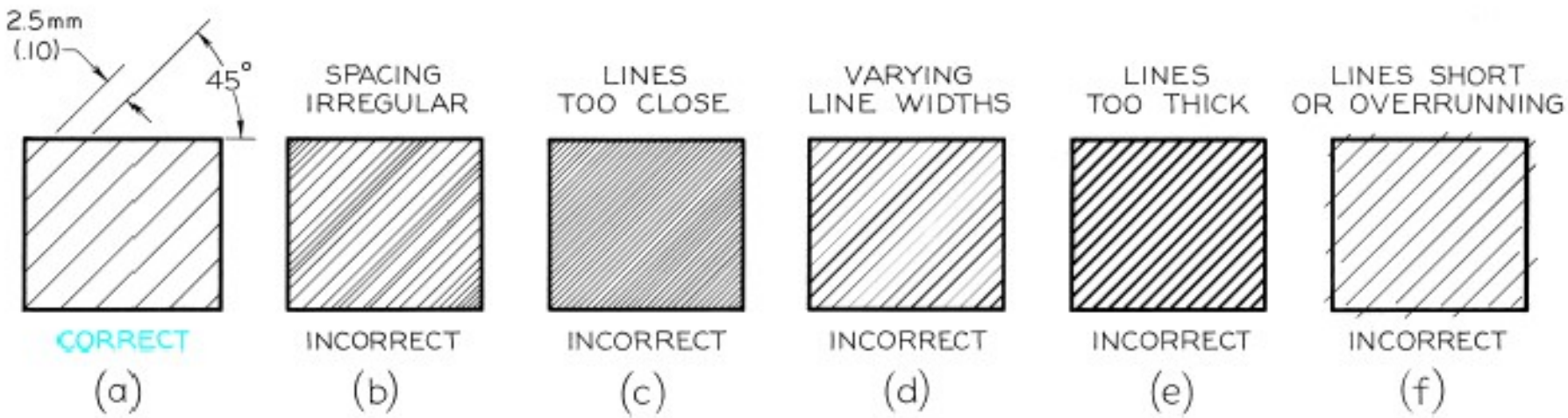

Figure 7-6

Section-Lining Technique

Cutting Planes & Sections

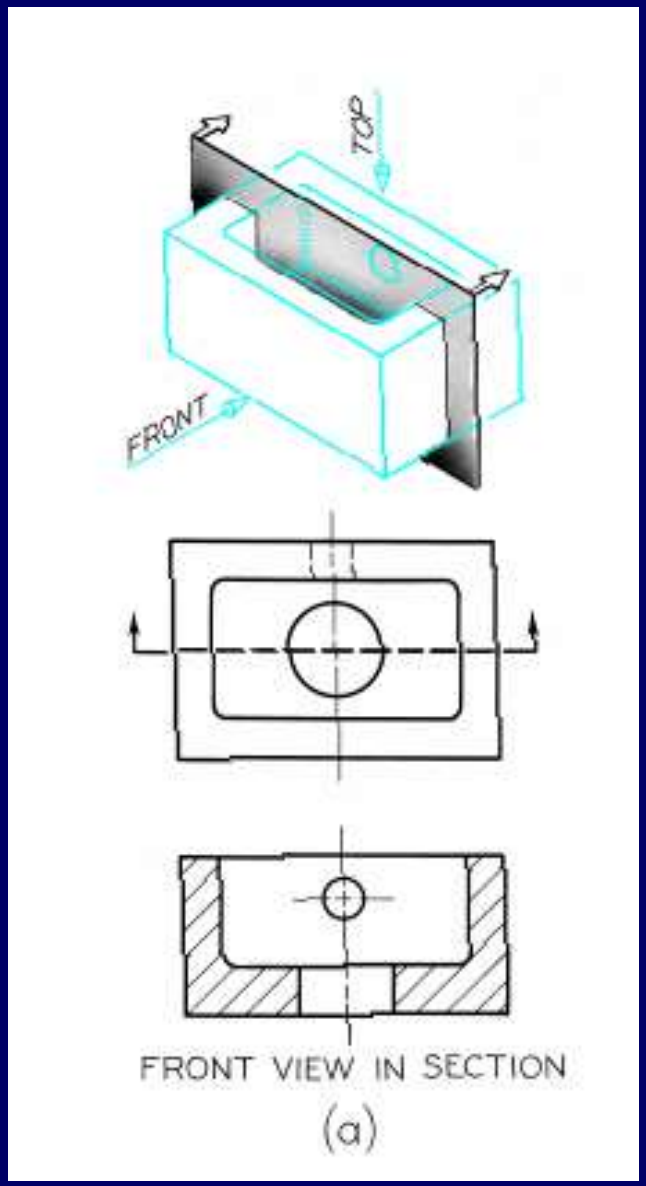

Cutting Planes & Sections

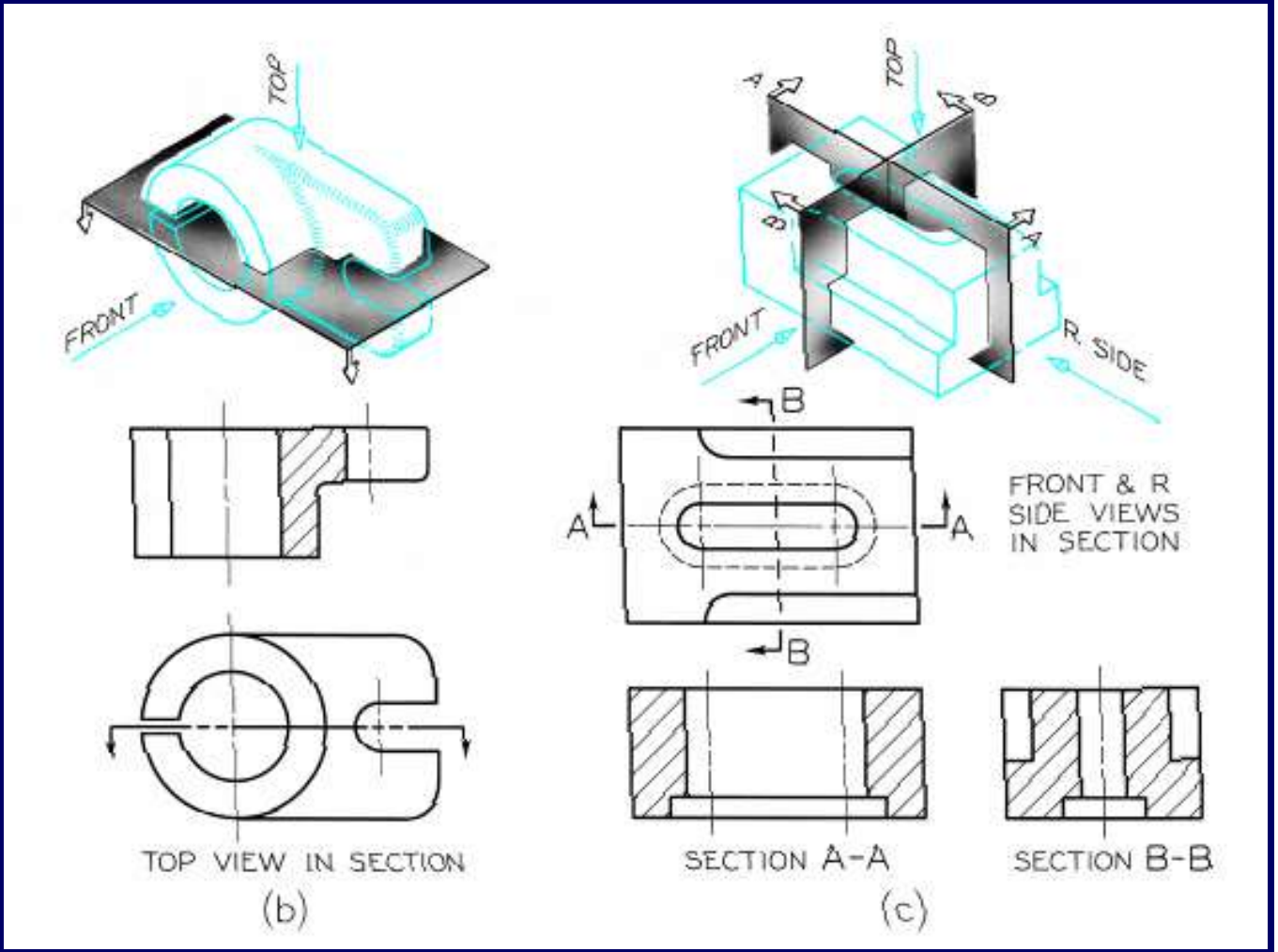

Types of Section Views

- Full sections
- Half sections
- Revolved sections
- Removed sections
- Offset sections

Full Section View

- In a full section view, when the object is assumed to be cut through entirely and the front half removed.
- Note that hidden lines become visible in a section view

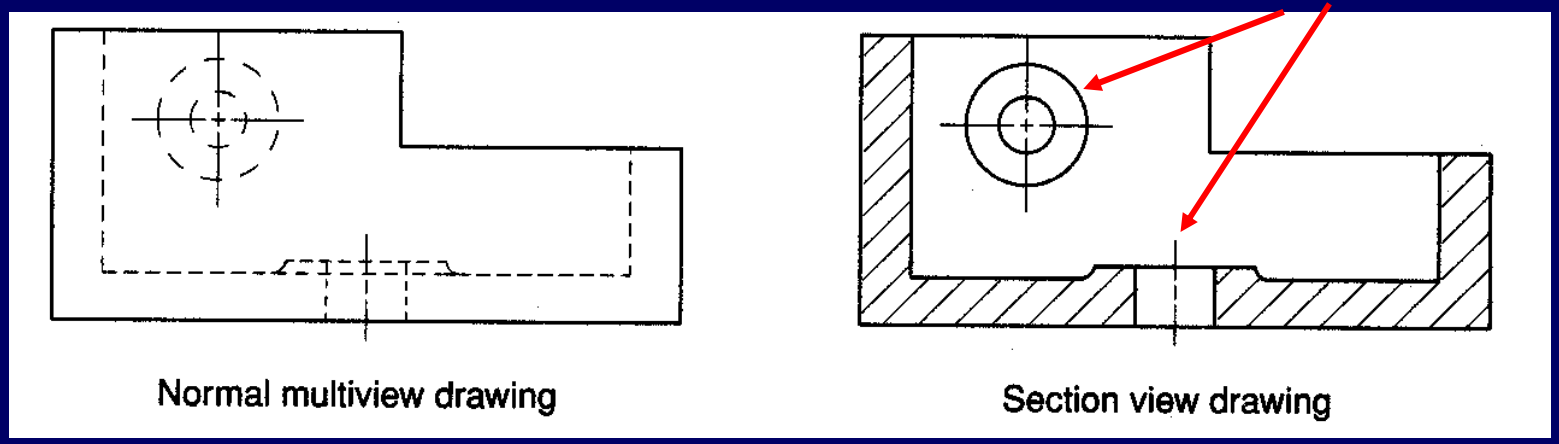

FULL SECTION VIEW

The view is made by passing the ***straight*** cutting plane ***completely through*** the part.

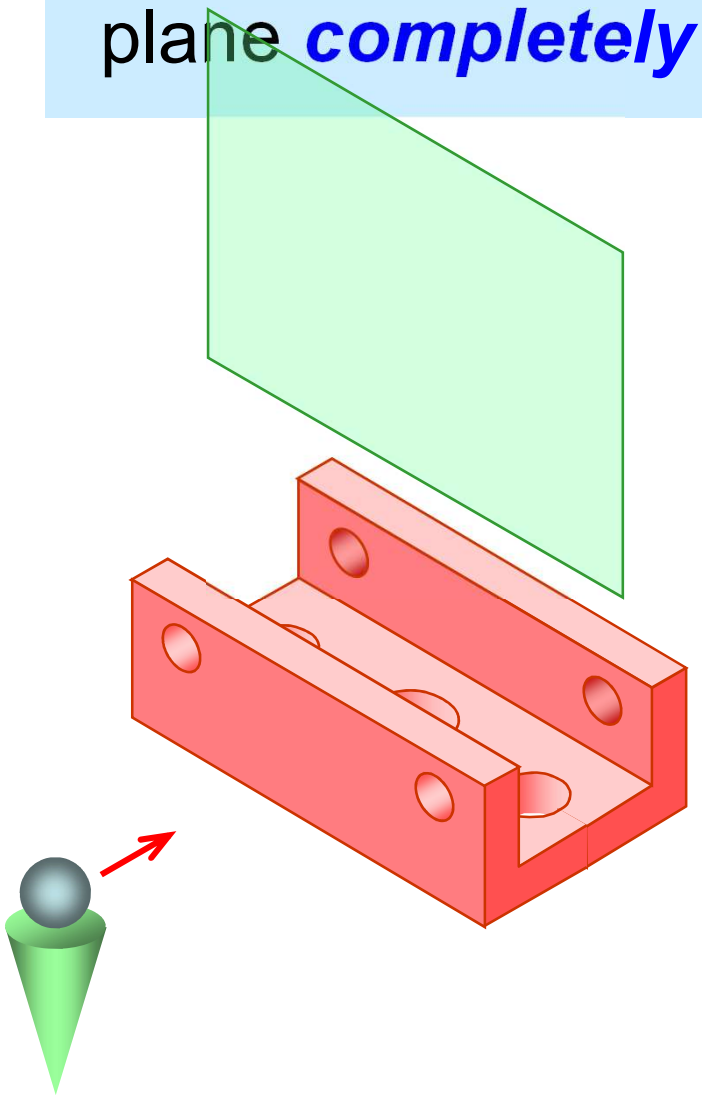

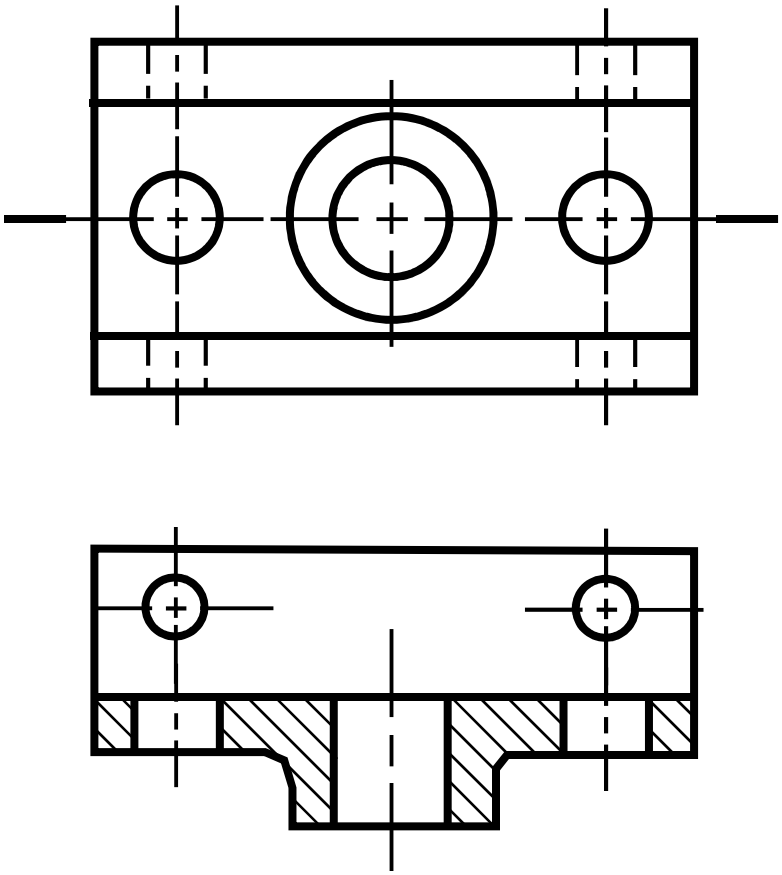

Multiple Sectioned Views

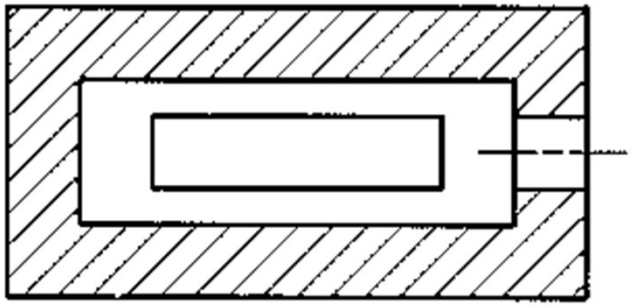

SECTION A-A

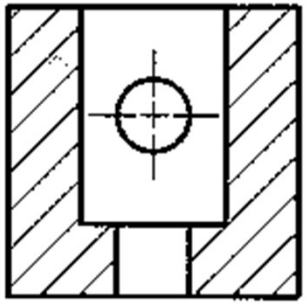

SECTION B-B

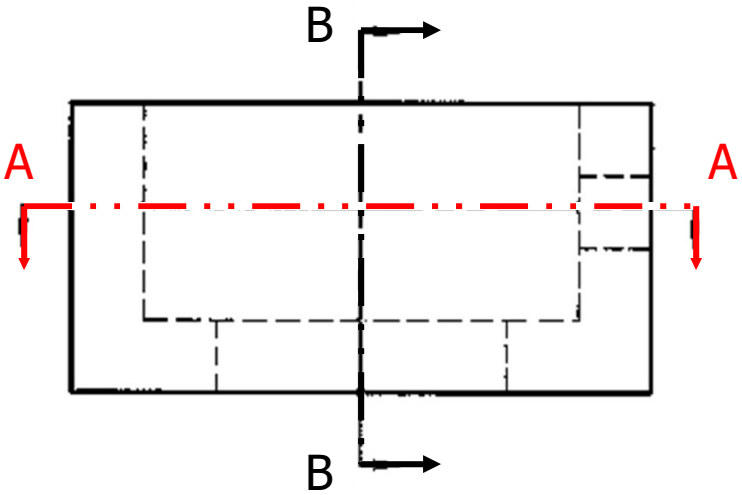

Individual Exercise

- Sketch a full section of the object shown below

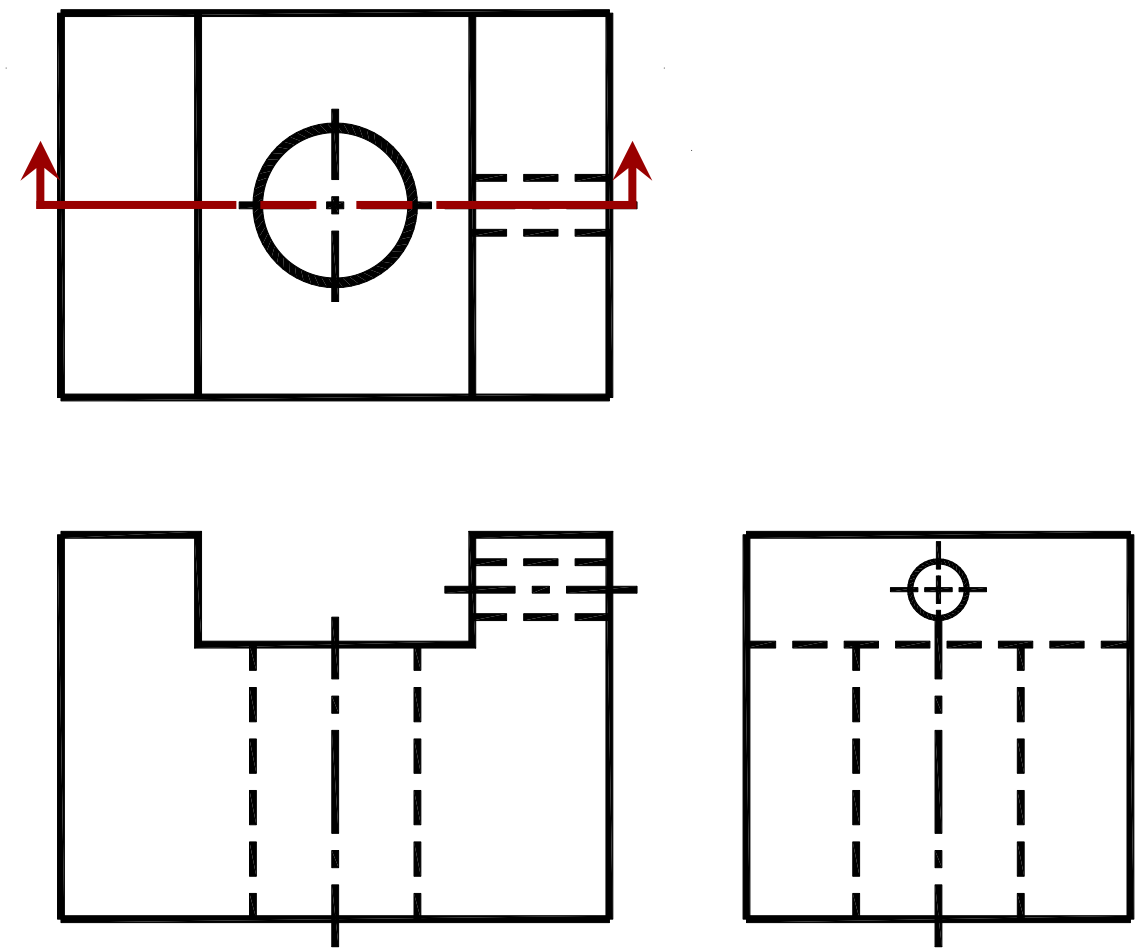

Individual Exercise

- Were you correct ?

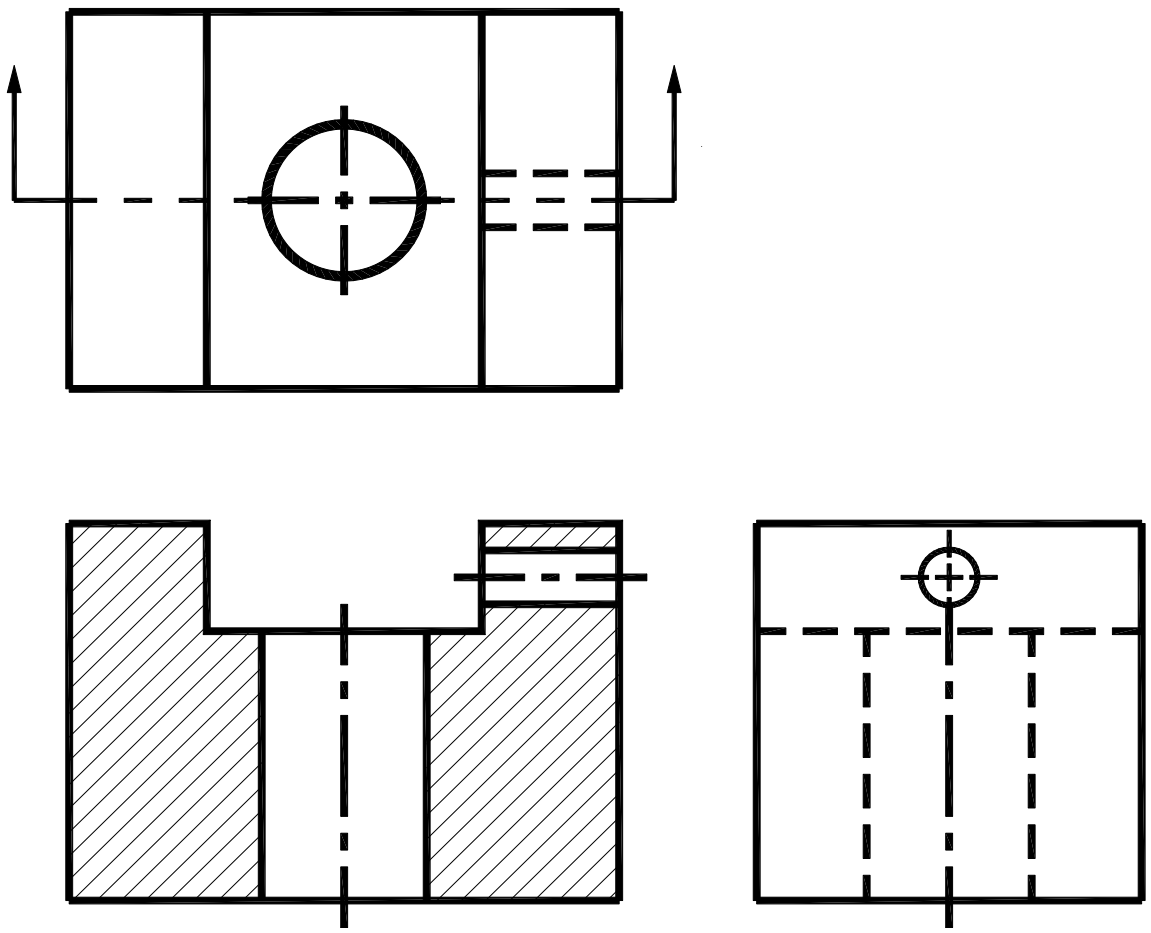

HALF SECTION VIEW

It may be assumed to be cut by two cutting planes at right angle to each other and containing two center lines of the object.

The one quarter of the object between two plane is then removed showing only a half section.

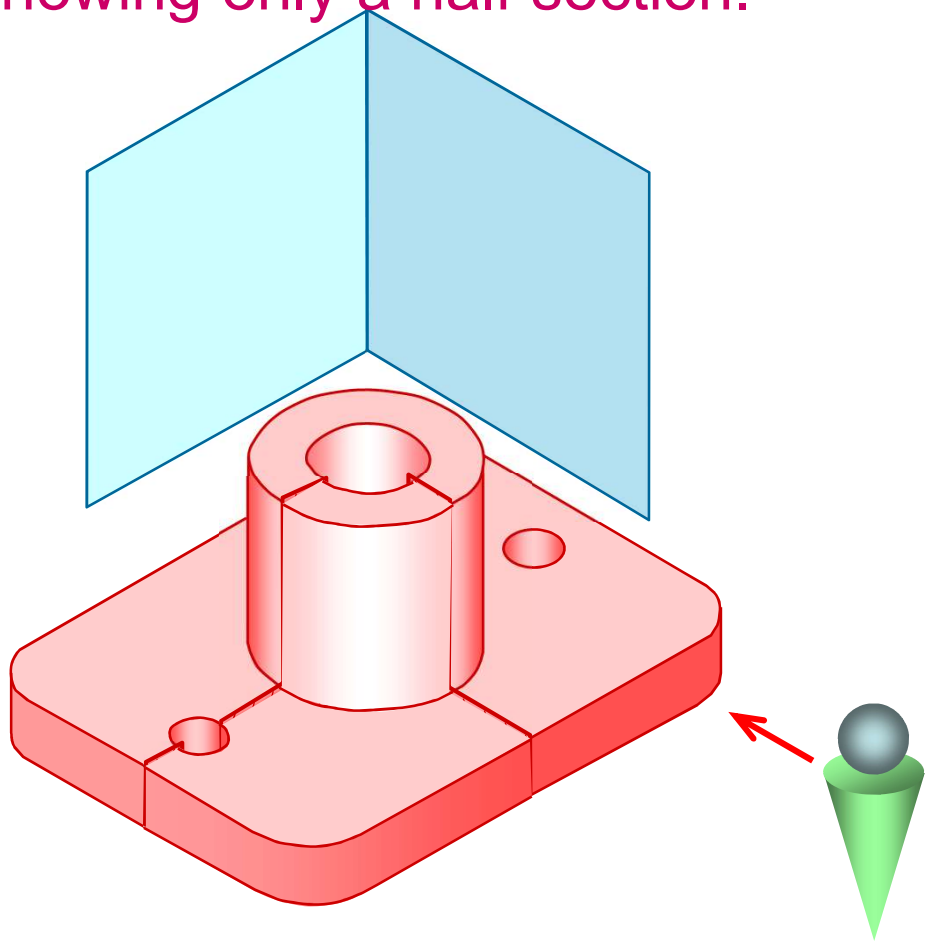

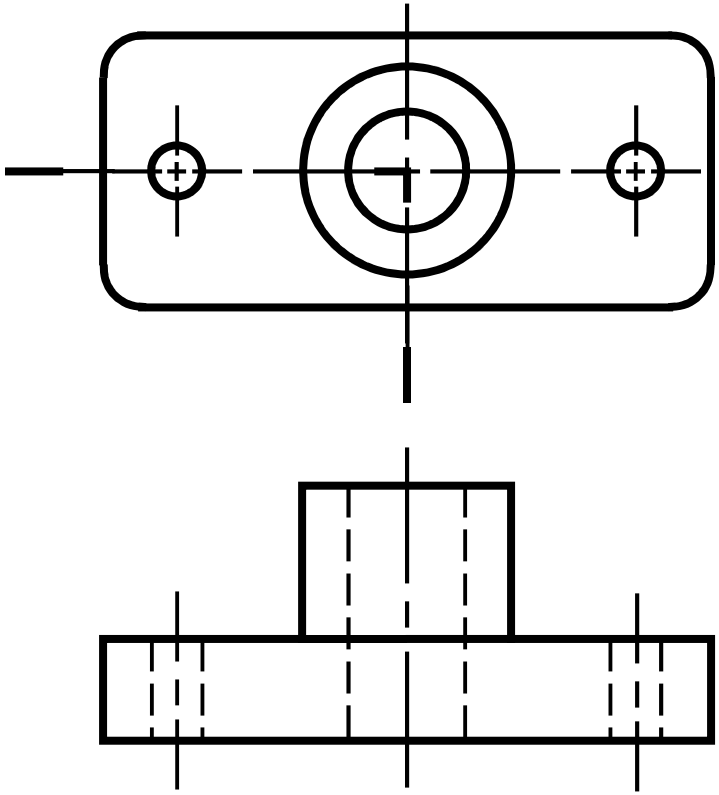

HALF SECTION VIEW

- A ***center line*** is used to separate the sectioned half from the unsectioned half of the view.
- ***Hidden line*** is omitted in unsection half of the view.

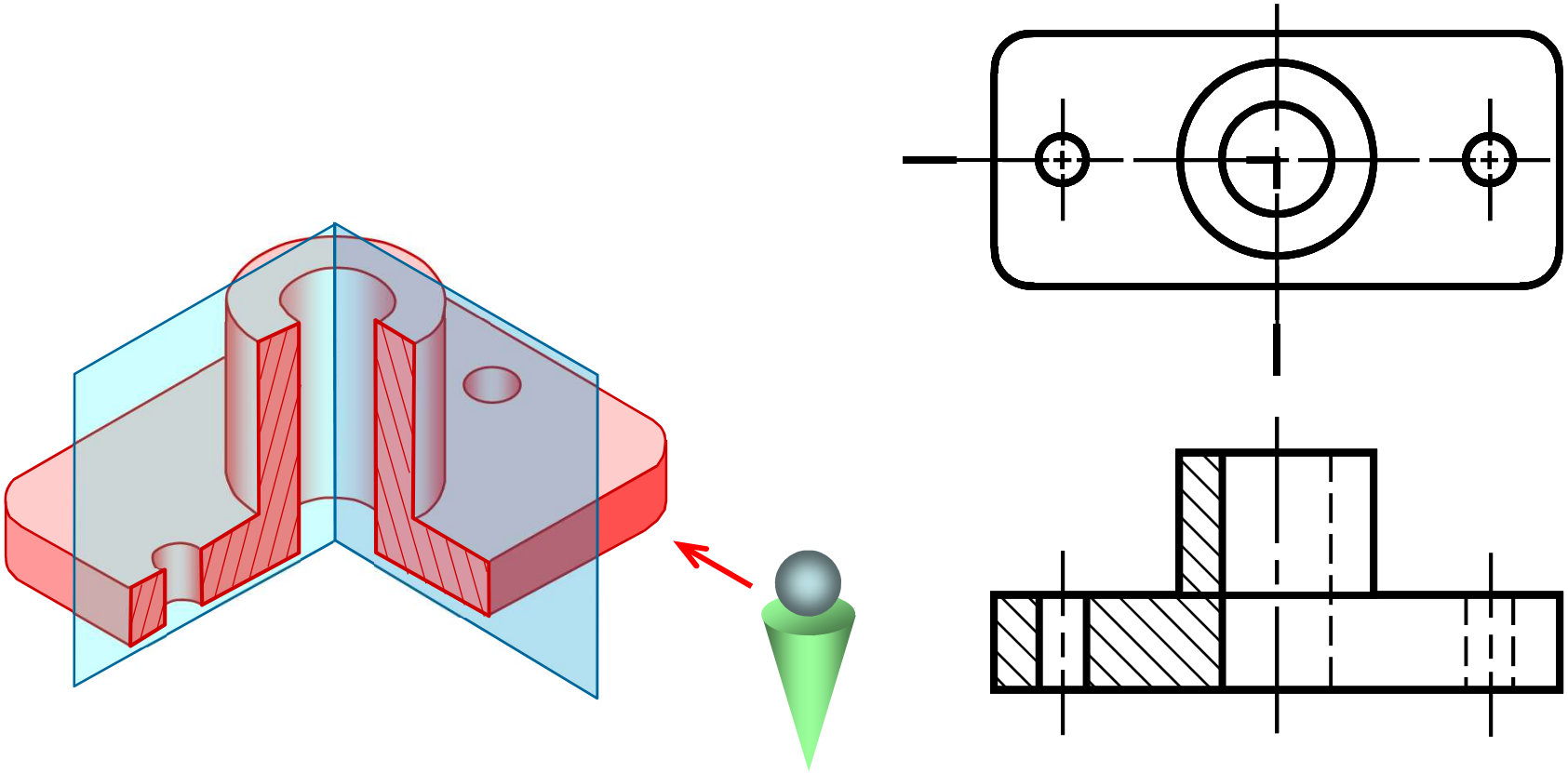

THANK YOU